DIPLOMAT MODEL PRO 600, PRO 800

A - water supply 1/2" pipe (PVC, Cu) finish with pipe socket with G1/2" internal thread, 5-10 mm above the floor level
B - water supply 1/2" pipe (PVC, Cu) finish with pipe socket with G1/2" internal thread, 5-10 mm above the floor level
C - suction PVC pipe Ø 32, 5-10 mm above the floor level
D - water waste PVC pipe Ø 32, 5-10 mm above the floor level
E - electrical conduit pipe (Ø32) - main supply 230V, cable CYKY-J 3x2,5 lenght above the floor level = 500 mm
F - electrical conduit pipe (Ø25) the safety earth wire CY4 - GNYE (green-yellow) lenght above the floor level = 500 mm
G - electrical conduit pipe (Ø32) suction control, cable CYSY 2x1 lenght above the floor level = 500 mm
H - electrical conduit pipe (Ø32) FTP CAT 5 4x2x0,5 lenght above the floor level = 500 mm, end in router
I - electrical conduit pipe (Ø32) cable HDMI, if there is monitor on dental unit the ending will be in computer

DIPLOMAT DENTAL SOLUTIONS

DIPLOMAT DENTAL s.r.o.
Vrbovská cesta 17
92101 Piešťany
Slovak Republic
www.diplomat-dental.com

reviosion: A
date: 02_2022

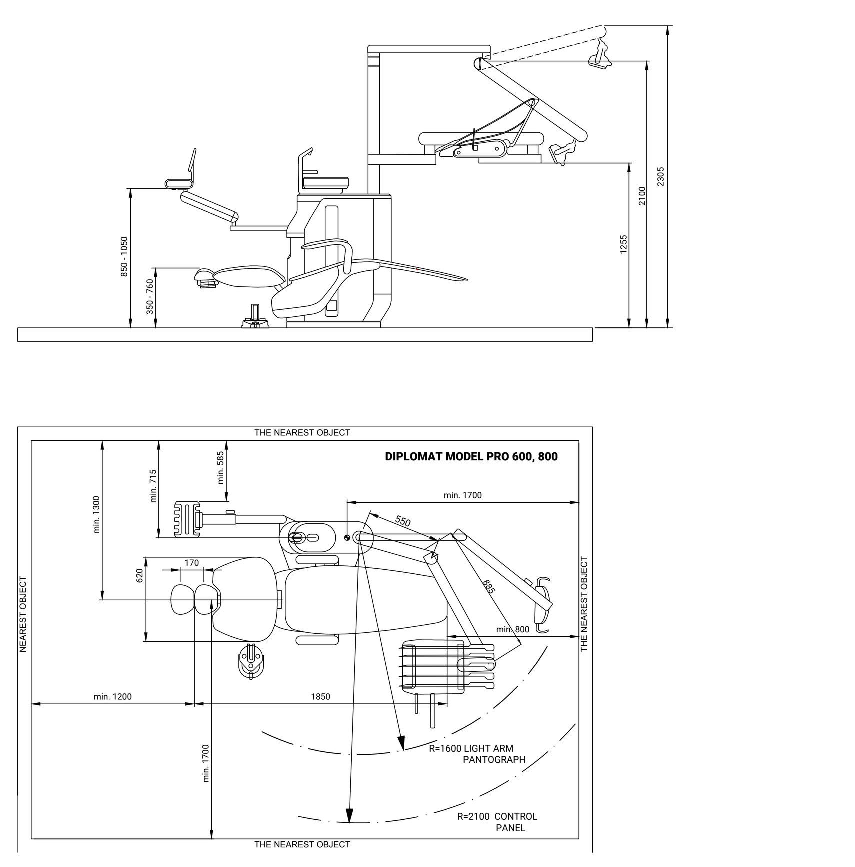
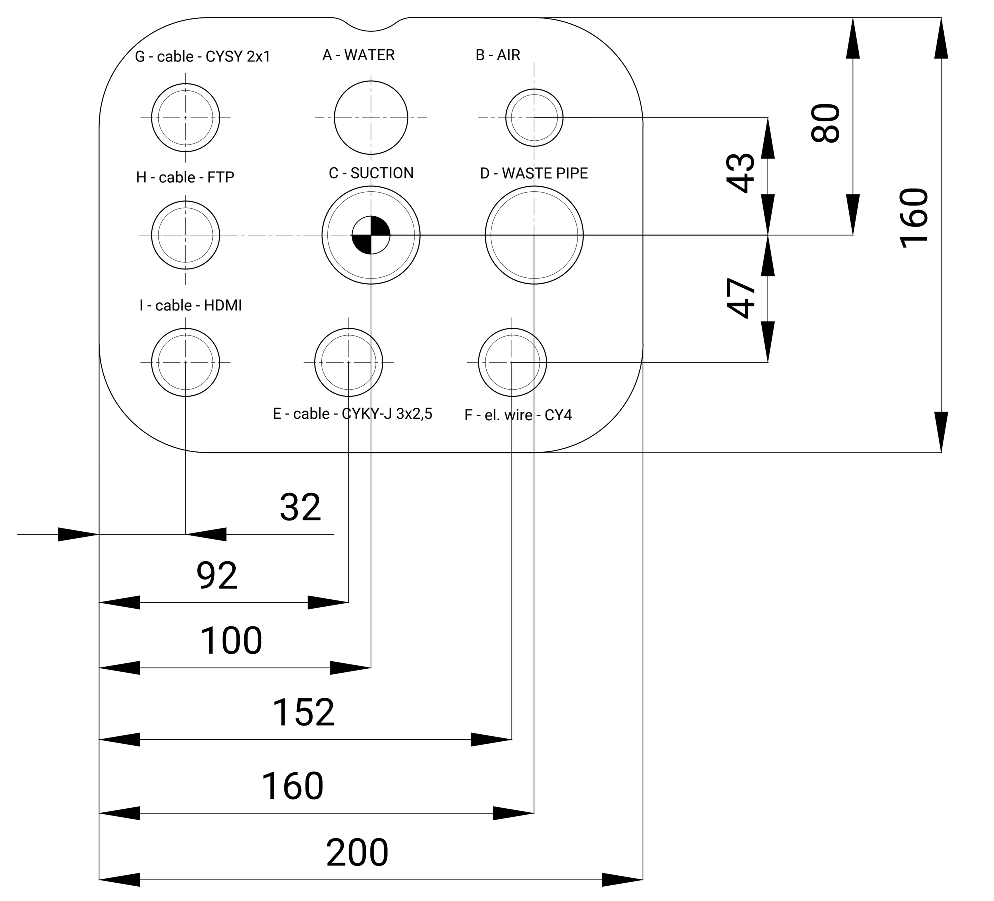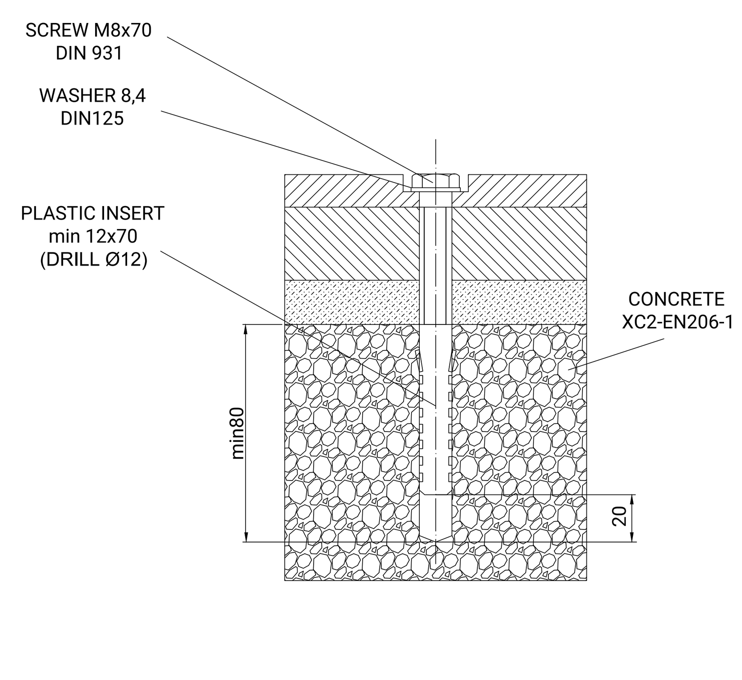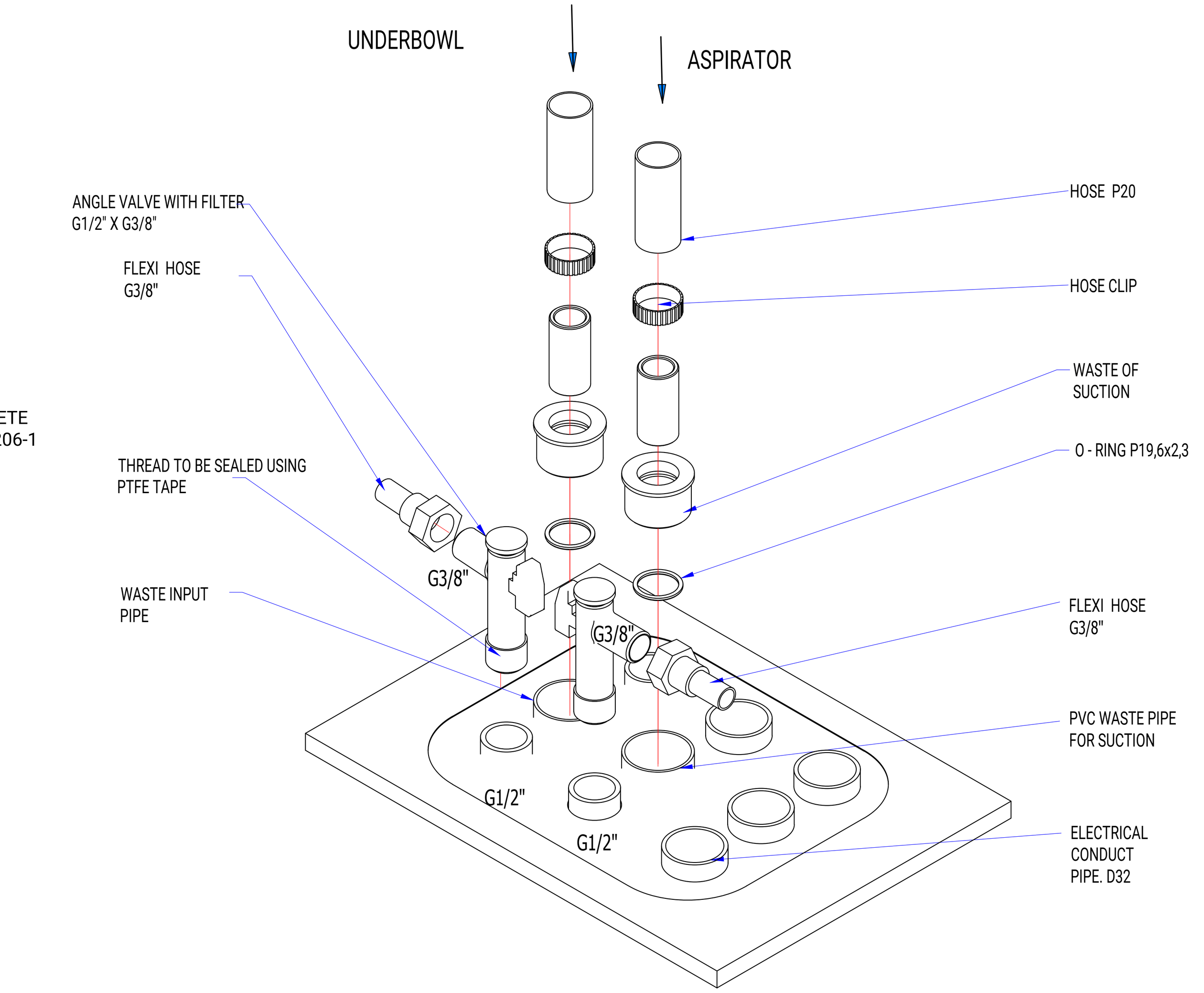
MIERKA 1:1